UNCLASSIFIED
Australian Army History Unit
16 July 2014
012000125

AUSTRALIAN ARMY JOURNAL

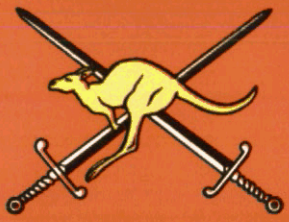

No 135
AUGUST
1960

Notified in AAOs for 31st August, 1960

MILITARY BOARD

Army Headquarters
Canberra
1/8/1960

Issued by Command of the Military Board

Distribution:

The Journal is issued through Base Ordnance Depots on the scale of One per Officer, Officer of Cadets, and Cadet Under Officer

Frontispiece

On 7/8 December 1941 the Japanese, without a declaration of war, attacked the American Naval Base at Pearl Harbour and landed in northern Malaya, where 8 Australian Division formed part of the British garrison.

Attacked by vastly superior forces specially trained and equipped for jungle warfare, the British garrison was compelled to withdraw to Singapore island. During the long retreat down the Malay peninsula Australian units were constantly in action, and made the enemy pay heavily for every success ne gained.

At Bakri on 18 January two 2-pounder guns of 2/4 Anti-Tank Regiment fought a close action with nine Japanese tanks, destroyed all of them, and thus temporarily relieved the pressure on the infantry. The picture shows one of the guns firing during the engagement.

AUSTRALIAN ARMY JOURNAL

A Periodical Review of Military Literature

Number 135 August, 1960

CONTENTS

Page

Command and Grouping for Battle in the Pentropic Division *Directorate of Military Training* 5

The Real Goal of Army Aviation *Brigadier-General Clifton Von Kann* 12

Descent from the Summit — Strategic Review 16

Some Minor Classics of the First World War . . . . . *J. T. Laird* 21

The First Australian General Service Vehicle . . *Major J. T. Ashenhurst* 34

Be Attractive to be Active . . . . . *Captain E. M. McCormick* 38

Book Reviews 43

UNCLASSIFIED

The information given in this document is not to be communicated either directly or indirectly to the Press or to any person not authorized to receive it.

Photo: Australian War Memorial, Canberra.

Bakri—1941

AUSTRALIAN ARMY JOURNAL

Editor:

COLONEL E. G. KEOGH, MBE, ED (RL)

Assistant Editor:

MAJOR W C. NEWMAN, ED.

Staff Artist:

MR. G. M. CAPPER

The AUSTRALIAN ARMY JOURNAL is printed and published for the Directorate of Military Training by Wilke & Co. Ltd. The contents are derived from various acknowledged official and unofficial sources and do not necessarily represent General Staff Policy.

Contributions, which should be addressed to the Director of Military Training, Army Headquarters, Melbourne, are invited from all ranks of the Army, Cadet Corps and Reserve of Officers. £5 will be paid to the author of the best article published each month. In addition, annual prizes of £30 and £10 respectively will be paid to the authors of the articles gaining first and second places for the year.

COMMAND AND GROUPING FOR BATTLE IN THE PENTROPIC DIVISION

This article has been prepared by an officer of the Directorate of Military Training. The views expressed do not necessarily represent official doctrine.

DIVISIONAL HEADQUARTERS

THE Pentropic Division organization has made a number of significant changes in flexibility for command and grouping at divisional level. This article points out those functions of command which are new or altered, and describes the flexibility for grouping into task forces or battle groups.

The outline organization of divisional headquarters is shown in Figure 1.

Divisional Commander

The divisional commander retains all the responsibilities for command in training and battle. However, the complexity of divisional operations may well prevent the commander from giving personal attention to all the detailed matters of command. In order that he may concentrate on those essential aspects of his task which require his personal attention, he will probably rely on his staff to a greater extent than before to exercise his authority. The commander will establish firm policies and delegate the necessary authority for their efficient execution.

The Deputy Divisional Commander/ Task Force Commander

The deputy divisional commander is also the task force commander. In this dual role he assists in the command of the division by performing specific tasks given him by the divisional commander.

As deputy divisional commander his duties normally consist of advising the commander on policy matters and supervising matters of particular interest to the commander, for example long-range planning, and training. Where appropriate he will employ the task force staff to assist him.

As task force commander the deputy divisional commander uses task force headquarters to assist him in the command of a task force or the operation of an alternate command post.

During tactical operations in limited war, the deputy divisional commander and the divisional commander normally operate from the same location. Whether they should be separated, and the degree of separation, will depend on the commander's appreciation of the nuclear

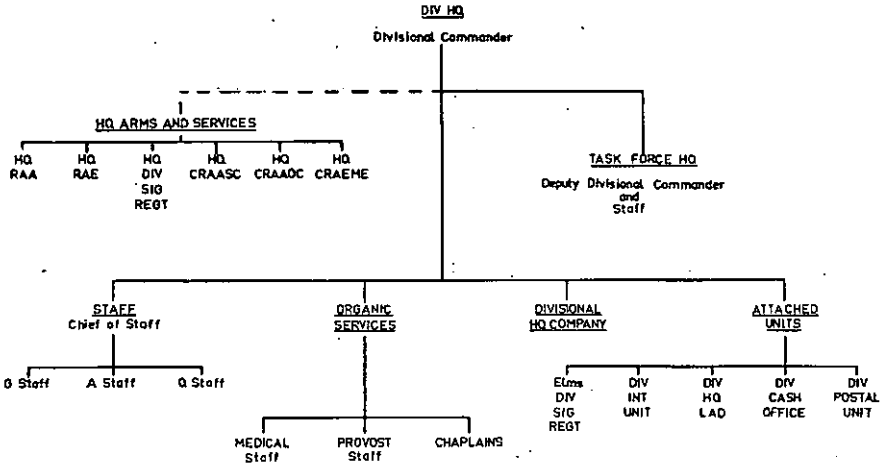

Fig. 1

threat. Whenever the deputy divisional commander has established an alternate headquarters, he must keep abreast of the tactical situation so that he is prepared to carry out any task allotted by the commander, or to take over command of the division if necessary. In these circumstances close liaison must be maintained between the deputy divisional commander and the divisional commander, but the two should be together for the minimum time only to reduce the possibility of both being lost by one enemy strike.

Succession of Command

To ensure continuity of command during operations the divisional commander must lay down a clear policy for emergency succession to command in the event of himself or his subordinate commanders becoming casualties. Normally, seniority in rank will determine who will succeed to command; however, the policy for succession must provide that the person who has the best knowledge of the situation and adequate facilities to execute command will assume temporary command in case of emergency. This person will exercise command until such time as the next senior can properly assume command or a new commander is appointed.

The Divisional Staff

General

The purpose of the divisional staff is to assist the divisional commander in the exercise of command. In addition to undertaking detailed work, the staff takes executive action within the authority delegated by the commander. The requirement for speedy and efficient staff action is always important, but on the nuclear battlefield it is vital. It is achieved in part by ensuring that staff responsibility is clearly defined and by the staff taking full action on those matters delegated to it.

The Chief of Staff

The chief of staff is responsible to the divisional commander for the

direction, co-ordination and execution of all staff work within the divisional headquarters. The chief of staff must be prepared to exercise completely the authority delegated to him by the commander and thus leave the commander as free as possible to handle the division tactically and to deal with major aspects of policy and planning.

The General Staff

The general staff deals with operations, intelligence, staff duties and training. In addition it sets up a radiological centre.

The Administrative Staff

The administrative staff is divided into the normal A and Q staffs, with unchanged responsibility for directing and working with the services.

Task Force Staff

The task force staff is discussed later in this article.

Radiological Centre

A radiological centre is included in the divisional headquarters staff to assist and advise on nuclear, biological and chemical matters, and to set up a radiological centre. This centre is responsible for ensuring that accurate and up-to-date information is always available to the commander on areas which constitute a radiological hazard and on the extent of the hazard. It is also responsible for predicting fall-out, for organizing radiological surveys and monitoring and for the collation, evaluation and dissemination of radiological information.

Headquarters of Arms and Services

The headquarters of arms and services continue to have responsibility for advice to the commander and staff, of commanding units of the appropriate arm or service, or of technical supervision where command is permanently decentralized.

SPLIT OF DIVISIONAL HEADQUARTERS

General

The divisional headquarters works most efficiently when concentrated; however, operational conditions normally require it to split into main and rear divisional headquarters. Tactical and task force headquarters may also be established when required.

Since the manner in which these headquarters function determines to a large extent the effectiveness of the division, it is essential that sound standing orders are developed for their organization, operation, layout, movement, internal arrangement and security.

The composition of each headquarters must be regarded as flexible and be changed as the situation warrants.

Main Divisional Headquarters

Main divisional headquarters is the principal location from which the divisional commander exercises command of the division.

It will normally include:—

The divisional commander
The Chief of Staff
All G staff
A representative of A staff
A representative of Q staff
The Provost staff officer
The Divisional Intelligence Unit
HQ RAA
HQ RAE
HQ Divisional Signal Regiment

Rear Headquarters

Rear division headquarters is con-

cerned with administration, including staff direction of the services.

It will normally include:

A staff } less representatives of
Q staff } each at main

Medical staff (ADMS will often be at main)
Chaplains
Education
HQ CRASC
HQ CRAOC
HQ CREME
Cash office, postal and other miscellaneous units.

Tactical Headquarters

As the divisional commander normally fights the division from main headquarters, no special provision is made in the establishment for a tactical headquarters. However, when the situation requires, the divisional commander, accompanied by a small staff and with the necessary communications, may locate himself away from the main headquarters at a suitable observation post, signals communications centre, or headquarters of a subordinate commander. The commander and his small group is called the divisional tactical headquarters. It is small, mobile and normally operates for only short periods of time as an extension of main divisional headquarters.

The composition of the divisional tactical headquarters will be specified by the divisional commander. It will vary with the circumstances —especially the need for protection *and the efficiency of communications* and the time it is to be deployed. A possible composition is as follows:—

Commander
A G staff officer
A liaison officer
The CRA
An artillery staff officer.

TASK FORCE HEADQUARTERS

General

The task force commander (deputy divisional commander) and the task force staff form the task force headquarters. Although an integral part of divisional headquarters, the task force headquarters may be required to function separately from the rest of the headquarters.

A possible composition of a task force headquarters is shown in Figure 2.

Functions

The task force headquarters may be established to perform any of the following functions:—

(a) Command a task force.
(b) Command subordinate units (or battle groups) as an intermedi-

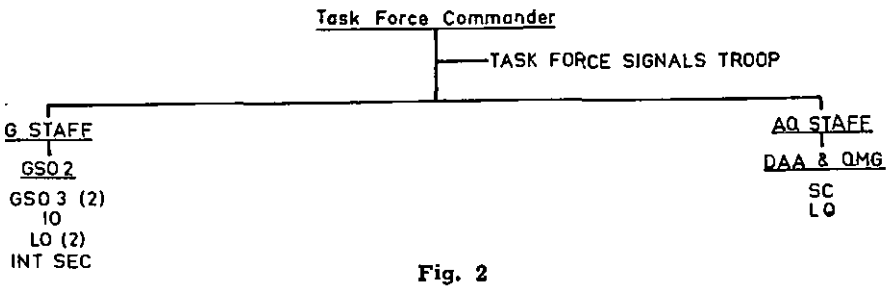

Fig. 2

ate headquarters when the divisional commander wishes to reduce the number of units directly under his command.

(c) Operate as an alternate headquarters, capable temporarily of taking over command of the division in an emergency.

(d) Supervise specific activities of the division, such as collective training or the rehabilitation of units.

(e) Long-range planning.

(f) Such other tasks as may be allotted by the divisional commander.

Supplementary Attachments

No representatives of the arms and services are specifically allotted to the task force headquarters, but it may be necessary, for a particular task, to attach representatives of some arms and services from divisional headquarters. Sustained operations may also require the attachment temporarily of additional staff officers from divisional headquarters and extra communications and transport. Also, in the initial deployment of a task force in an operational area in advance of the rest of the division, it may be necessary to augment the task force headquarters considerably with staff and administrative and protective elements from divisional headquarters. In such circumstances these elements will revert to divisional headquarters when the divisional headquarters is in a position to exercise control over the division.

Administrative Support and Protection

The task force headquarters is not self-contained administratively, nor has it its own protective element. When established as an alternate divisional headquarters it must deploy with or adjacent to a unit or signal communication centre from which it can obtain some administrative support and protection. When operating as task force headquarters, administrative support and protection will be provided from elements of the task force.

GROUPING FOR BATTLE

General

The division is most effective when fought as a division and when concentrated sufficiently to ensure that all parts of the division can operate together for support and protection. In limited war in South-East Asia the numerical superiority of the enemy and his tactics render highly dangerous the splitting of the division into small, very widely dispersed groups. Nevertheless, operational circumstances, especially the need to disperse because of a nuclear threat or of the nature of the terrain, will on occasions require the divisional commander to form one or more groups of combined arms and services.

The many variations of the operational conditions in which the division must operate preclude the use of fixed groupings to deal with every situation. The divisional commander must organise his forces to accomplish his specific task. This grouping for battle not only ensures the combination of adequate and appropriate forces to carry out each part of the task, but is an important means available to the divisional commander in the exercise of command. The organisation of the division is specifically designed to provide flexibility in this grouping of forces to fit the requirements of the task and the situation.

In addition to organic units of the division, the divisional commander will employ such units or sub-units of the combat support group as he considers necessary. Should the division be operating as part of a corps in which all troops not organic to the division are controlled by a higher commander, he may be allotted the support of additional units as required.

While the grouping of units for tactical reasons will tend to change frequently in battle, administrative grouping should change as little as possible, so as to avoid dislocating established channels of supply.

Groupings

Groupings employed are:—

(a) Battle groups,

(b) Task forces,

(c) Smaller combined arms teams based on for example an infantry company or a reconnaissance squadron.

Battle Groups

An infantry battalion with other arms and services placed under command constitutes a battle group. The placing of elements in support or direct support of a battalion does not constitute a battle group, nor does the addition of small sub-units only under command.

While it will be normal for certain units to be affiliated with particular battalions and for them to train with and, wherever practicable, operate with those battalions, there is no fixed composition for a battle group. A battle group will normally include a field artillery regiment and a field engineer squadron. Additional artillery and elements of armoured, aviation and administrative units will be included in battle groups as required. However, it is better in general for command of these units, because of their organisation and roles, to be retained centralised as much as possible.

A Task Force

Although the divisional commander will retain direct command of battalions or battle groups as much as possible, there will be occasions when it will be necessary or advantageous for him to form a task force. He will do this by grouping a number of units and sub-units under the task force headquarters.

Composition

A task force, like a battle group, has no fixed composition, and it is organized to accomplish specific tasks. It will usually be based on a nucleus of two or more battalions, but may be based on a nucleus of one infantry battalion and the armoured regiment. It is commanded by the task force headquarters.

The task, terrain, own and enemy situation are factors in determining the composition of the task force. It should be a balanced force. Since it is usually difficult to reinforce a task force during the conduct of operations, careful planning of its organization is necessary.

Control

There are two broad types of divisional control under which a task force might be employed:

(a) *Under close divisional control.* In this case the divisional commander will have interposed the task force headquarters between his own headquarters and two or more battle groups in order to reduce the number of

units directly under his command. He then commands the task force direct and the task force commander commands the battle groups or whatever elements are grouped under his command. In this case the task force headquarters will usually be responsible for operational command only. Its orders from division will generally be expressed in terms of objectives and other control measures as required. However, it is essential that the extent of responsibility be clearly stated by the divisional commander.

b) *On independent missions acting on broad operation instructions.* In such cases the task force is under command of the task force commander for all purposes. He must be given a clear and definite task, but must be allowed maximum freedom of action within the overall aim.

The probable need to reinforce the task force headquarters under these circumstances was mentioned earlier. It will usually be necessary to provide additional support for the task force, both tactical, for example close air support, long-range artillery support, additional reconnaissance and intelligence support, and administrative support such as air supply.

Other Groupings

It will often be necessary to form smaller combined arms groups for specific tasks. Such groups may be formed at divisional level, for example based on a reconnaissance squadron or armoured squadron, or at battalion level, for example based on one or two companies. As a general rule such groups will operate within wireless range of the parent organization and undertake tasks of limited duration.

Extent of Command

When units or sub-units are grouped under command of infantry battalions or task force headquarters they will usually be under command for all purposes. However, in some cases it may be desirable to divide administrative responsibility between the headquarters under which the unit or sub-unit is grouped and the parent headquarters. This will depend on the duration of the grouping and considerations of distance and communications. No confusion will arise if the headquarters ordering the grouping issues clear and detailed instructions as to the division of responsibility.

The commanders of arms and services will act as advisers to the battle group or task force commander on their particular arm and service. Subject to the policy of the commander under whom they are grouped and the over-riding policy of the divisional commander, units or sub-units placed under command may continue to deal direct with the parent headquarters on purely technical matters.

Conclusion

The principles of handling a headquarters and for grouping within the division have not changed. The requirement for greater flexibility has been met by changes in organization which will allow quicker staff action and a greater number of effective variations in the grouping of the division. These changes will only be of value provided that commanders at all levels recognize the desirability of centralized control, and avoid inflexibility in grouping when decentralization in any degree is required.

THE REAL GOAL OF ARMY AVIATION

Brigadier-General Clifton Von Kann,
Director of Army Aviation, United States Army
Reprinted from the January 1960 issue of the Canadian Army Journal

This is the text of an address delivered by Brigadier-General Von Kann to the Aviation Writers' Association at the National Press Club in Washington in October, 1959.—Editor.

ONE of the ghosts that haunts every discussion of Army aviation is "another Air Force." To add to this scare factor there are a lot of little minor ghosts who always accompany the first:

"The Army wants to take over TAC,"

"The real goal of Army aviation is its own branch,"

"Army aviation is merely another example of divergence rather than unity within the services."

There seems to have been a great deal of reluctance to mention these ghosts except in dark corners of smoke-filled rooms. My purpose today is to bring them out in the light in the hope that this form of exorcism may lay some of these fears to rest.

The Army has no reason to be ashamed of its aviation programme. We are convinced that it is a very essential portion of the overall Army. Its only purpose in being is to enhance the capability of the Army to perform its vital missions. There are no hidden goals of dark, mysterious intentions contained in these objectives. We are not in competition with anyone except a potential enemy.

Where Is Army Aviation Heading?

Then just where is Army aviation heading? To answer that one must examine where the Army is heading—for the questions are inseparable.

The thermo-nuclear weapon has swung the pendulum of military thinking once more toward dominance of firepower. But firepower is only one of the elements of combat power. Unless it is complemented by mobility and the means of command and control, firepower does not mean combat power.

History has given us many examples where an imbalance of the elements of combat power influenced the very nature of the battle. The most striking example of recent times is shown in the comparison of World War I and World War II. In the latter half of the nineteenth

century repeating rifles, machine guns, and rapid-fire artillery were added to the armament of the ground soldier, while the soldier, of course, continued to walk a mile and a half an hour across country the way he had always been walking. The result of this growth in firepower, without any comparative growth in movement, was that the soldier found that in order to stay on the battlefield at all he had to dig elaborate trench systems. Nobody liked trenches, but some were occupied continuously for four years, from 1914 to 1918.

In the years between World War I and World War II the pendulum swung toward the predominance of mobility. The German Army was the first to recognize this change, and they reaped the gains that come with innovation in the successes of the early "blitzkrieg" attacks. The basic armament of the soldier was substantially the same—automatic rifles, machine guns, and artillery. But tanks, trucks, fighter bombers and airborne divisions had been integrated into the system to give new mobility means of applying combat power. Consequently, World War II was not a trench war.

Then at the end of World War II the explosion of the atomic bomb gave notice that firepower had a new dimension. I think it is very clear from history that if there is no addition to our movement capability, the only way our land Army will survive is to disperse, dig very deep holes, and stay in them.

Mobility Essential to Offensive War

Survival, in itself, is not the mission of the Army. The dominant principle in our military doctrine has been, as it always must be, to emphasize that wars can be won only by offensive operations; and mobility is an essential element of offensive operations.

We could build, I assume, a 200-mile-an-hour tank, but this does us little good if the only place we could use it would be the Salt Flats in Utah. Only marginal gains can be made if we restrict ourselves to the ground. But is the land battle restricted to the ground? By definition, land-warfare includes the air and sea contiguous to the battle, just as the air battle includes the airfields, and the sea warfare concept includes the ports and harbours.

If we don't restrict our thinking to the ground, we have a new dimension to tactical mobility. The Army's Chief of Staff, General Lemnitzer, said last August, "With respect to tactical mobility, I want to make particular mention of the various types of aircraft, both in being and experimental, which make up Army aviation. What these and other developments in mobility mean is that we are on the verge of a situation that is drastically new. Throughout history a major limitation on the freedom of action of land forces—and consequently on their effectiveness—has been the barrier of terrain. We can now foresee a time when mountains and rivers and other terrain features will cease to be obstacles or limitations. They will be meaningful chiefly as advantages to be exploited as the situation indicates."

This statement is a strong indication of where the Army is heading, and clearly points up the tremendous responsibility of Army aviation. Tomorrow's battlefield will be

a mass of obstacles, for in addition to the natural rivers, mountains and jungles, we must add the possible man-made obstacles from nuclear, chemical and biological weapons. The area of combat will be a crazy quilt of friendly and enemy forces with gaps that no one controls completely. The unit that can concentrate and disperse the quickest, while maintaining its integrity, is the unit which will survive. It is fundamental to this concept that the aviator and the aircraft are an integral part of the tactical unit.

Aviation: An Aid to the Mission

The Army is not interested in the aeroplane per se. Its interest lies in how aviation can help the Army accomplish its mission. If we lose sight of this objective, and become fascinated by flying from a purely pilot's viewpoint, we are in danger of failing our basic purpose. We must constantly picture the aircraft and pilot in the environment of the soldier, for the mission of Army aviation is based on the mission of the Army.

With this mission it seems ridiculous to limit ourselves to some one branch of the Army—to an Army Air Corps. We would be selling ourselves and the Army short. We would be forgetting the lesson of the 'twenties and 'thirties, when no infantryman, no cavalryman could fly an aeroplane. You had to belong to the Air Corps. I am sure that you gentlemen have heard scattered individuals in Army aviation who insist that the Army must have an Aviation Branch. There certainly may be a requirement for personnel who devote their entire careers to aviation matters.

In the longer view, however, just as we now argue that the Air Force has no monopoly on flying machines because they fly, similarly no one branch in the Army should have a monopoly. We don't pool all of our jeeps and trucks in one branch. The Signal Corps doesn't operate every telephone and radio, nor does the Engineer Corps run all our generators. The peculiar characteristics of a piece of equipment do not indicate the mission. Rather the equipment is given to the people who need these characteristics to accomplish the mission.

We dare not be compartmentalized now. The big advantage we have as Army aviators is that as a group we belong to no one special branch, have no parochial little axes to grind and have one common goal—an air-minded Army. We do not want to be considered a little privileged and specialized organization —we want everyone in the Army to understand and be part of a new mobility programme.

The Problem: A State of Mind

Our real problem, then, is one of the state of mind. Unless we can convince everyone of the importance of this programme, the necessary effort and money to do this job will not be forthcoming. It is an ambitious programme and it obviously comprises a big enough goal without the added implication that "the Army wants to take over the Tactical Air Command." Now the Army holds that the TAC mission is one of the most important in the military establishment; we are perfectly happy to have the Air Force do it, but we insist it must be done. We realize that any Army aviation effort directed toward such a mission might detract from its

capability to perform its own assigned tasks, and could divert our attention from the bigger objective of an air-minded Army.

Today, we're a motor-minded Army. The basic ingredient of that motor-mindedness is the fact that you and I, all of us, drive automobiles. We understand automobiles; we feel perfectly competent to make decisions about automobiles. There is no doubt in our minds that we can command motorized units.

A Basic Need — Familiarity

By analogy, the basic ingredient of the air-minded Army is going to be familiarity with aircraft. Not necessarily everyone being a pilot, but every unit having organic aircraft integrated into its routine missions. We won't have an airminded Army by an approach of exclusiveness. The commander is not going to have any confidence in a remote pool of aircraft that he may possibly use on a part-time basis if he goes through ten headquarters with a high enough priority. We can only have an air-minded Army if we convince the commander that we are a part of his unit and that we can do a job for him not possible by any other means.

I started my career in the Artillery. Now the Artillery has many proud traditions, but the first thing one is taught in the artillery is that his prime purpose is combat support. The more he understands and participates in the operations of the supported units the more effective is the partnership.

All the arms have learned that it is not enough to be an infantryman or artilleryman or tanker. They must think combined arms—they are taught combined arms. Army aviation does not want to be "that bunch out at the airfield." They want to be recognized as a part of the combined arms team. We are proud of the aviator badge—but we want everyone to know it's an Army badge.

Now I'm not naive enough to assume that my words here have permanently banished the ghosts I mentioned originally. Every time that Army aviation is mentioned without relation to the Army as a whole, these spectres will reappear. Our biggest job lies in our own shop. Every Army aviator must understand his mission and show its value to his immediate commander. The ghost of "another Air Force" will never be completely put to rest until we in Army Aviation convince the Army itself of our goals, and demonstrate we are neither step-child nor favourite son, but rather an essential catalyst to the formation of a modern mobile Army.

Major-General Hamilton Howze summed it up very neatly when he said, " . . . it's hard to be audacious sitting at the bottom of a hole. In the air just above the tree-tops lies one of the greatest hopes for victory on the ground."

Strategic Review

DESCENT FROM THE SUMMIT

IN view of the widespread expressions of acute disappointment engendered by the sudden death of the late lamented Summit Conference, it is pertinent to ask if any reasonably well-informed person could really have expected any other result. Was Mr. Khrushchev genuinely enraged by the flight of the American reconnaissance aircraft? If he had allowed himself to be mollified and if the delegates had talked for a month, would any tangible result have emerged from the discussions? Did this much-canvassed conference ever stand a chance of advancing even a little way along the road to a firm settlement of the issues that divide the world? The answer to these questions depends on how much Khrushchev the politician is the master of his own destiny, on how much he is the arbiter of his actions.

Informed observers are aware that there have long been several schools of thought in Russian foreign policy. One, which developed in the years immediately before World War II, held that Russia should discontinue, or at least modify, her aim of bringing the world under Communist rule. They considered that a continuance of the efforts to stir up revolution and extend the Soviet power would probably lead to a general war, and almost certainly in the creation of a dangerous rival within the Communist world. On the other hand, if a moderate, even benign, policy were followed most of the world would drift gently leftwards of its own accord, while Russia made herself too powerful to be rivalled by anyone. The contest between this school and the rival group of active revolutionaries was not resolved when Germany invaded Russia.

During the war the revolutionary school gained complete ascendancy. At the same time a third group began to develop—a school of ardent nationalists, who aspire above everything to the expansion of Russian power by any and all means that may from time to time seem expedient.

The nationalists, perhaps imperialists would be a more accurate description, represent nothing new in political thought. They follow in the long tradition of rulers and parties who have schemed and fought to make their country the

dominant power in the world. While paying careful lip-service to the Communist creed, they care nothing for it, they care for nothing at all but the vision of "Holy Mother Russia" supreme and unchallengable. They regard Communism as a useful tool, as an instrument of policy, as a weapon for espionage and subversion, as a means of generally softening up their intended victims. Many, perhaps a majority, of service officers appear to support this school.

The fanatical Communists, on the other hand, are obsessed with revolution for its own sake, with the expansion of Communism rather than with the expansion of Russian power. They dream of a world dominated by a Communist hierarchy, a dream in which nationalism has no place. They see the imperialist faction as a useful ally in their expansionist aims.

Thus both schools of thought, while differing fundamentally in their ideological aims, are prepared to use each other as expediency dictates.

When Khrushchev hacked his way to power he found himself balancing on a tight rope. The dangerous rival to Russian dominance had indeed arisen; the new China was bidding strongly for Communist leadership and was having no little success in Asia. How long would it be before China, with her manpower and resources, challenged Russia in the field of imperialist expansion? Khrushchev would not be the successful politician he is if he did not see the danger as clearly as anyone. His problem is how to placate the imperialists by offsetting China without losing the support of the revolutionaries. Since the two factions are united in their aim of continuous expansionist pressures, and there is nothing to suggest that they are likely to fall apart, Khrushchev cannot play off one against the other. Neither he nor anyone else can rule without their support.

Neither of the expansionist factions sees any merit in total nuclear war, but both of them are attracted by the idea that Russia could safely and profitably exploit her apparently superior capability for conventional and subversive war. Khrushchev's barnstorming tours abroad pleased neither faction. One felt that he was preparing to yield too much, the other that he was making a fool of himself and of Russia. Both looked at the forthcoming Summit Conference with acute suspicion.

As the date for the conference approached, Khrushchev's personal dilemma became more difficult. If he yielded an inch on the crucial question of Berlin the expansionists would certainly cast him down. On the other hand, failure to achieve some lessening of the tension would enable the West to throw the whole blame on to Russia, which would enrage the patriotic imperialists.

Then the U-2 fell down or was shot down in the very heart of Russia. If Khrushchev did not immediately see the opportunity this fortuitous event gave him, he saw it clearly enough before he reached Paris. He was able to wreck the conference before any of the thorny questions bound to be raised were even mentioned. And he was able to wreck it in a way which was nicely calculated to whip up the patriotic fervour of the imperialists and the Russian masses, and which yielded nothing of the advantages which the revolutionary expansionists consider so important.

Instead of bemoaning the collapse of the Summit Conference, we should see it as an event which cleared the mists from our eyes, an event which shows us clearly how matters stand. All the wishful thinking was on our side. The real rulers of Russia, to say nothing of their counterparts in China, never had the slightest intention of yielding an inch. The only hope of a detente was for the West to yield on one or more crucial points. In all probability, if the U-2 incident had not occurred, the conference would have achieved nothing more tangible than a vague agreement to confer again at some unspecified time.

Thus, after a brief period of starry-eyed dreaming, we are again face to face with naked Communist two-dimensional expansionism. Since the initiative lies with our adversaries (we could do a great deal more to correct the balance), it is appropriate to attempt a forecast of their probable lines of attack. Several possibilities are open to them, possibilities that can be exploited one at a time or in any combination of simultaneous efforts.

In the European theatre, where the Communists enjoy a superiority of conventional forces, suppose East Germany actually carried out her threat to close the Allies' approaches to Berlin. Suppose Russia supported her with conventional forces and at the same time announced that:—

(a) She would not employ nuclear weapons of any sort.

(b) If the Allies used a nuclear weapon of any sort, even a little tactical one, she would consider herself free to use a nuclear weapon of any size on any target.

Would the West call the bluff? Would the Allies stake their fairest cities and vast segments of their people on the gamble? The Russian imperialists appear to think that they would not, that sheer pressure of public opinion would preclude Western Governments from risking a nuclear holocaust over an issue in which, after all, the masses feel no deep, passionate interest. A situation like that would indeed place Western statesmen in a frightful dilemma. Our opponents seem to think that we would fight conventionally or not at all. The imperialists think that they would win with their conventional superiority and push Russia's frontiers still further to the west. The revolutionary expansionists have no objections to a conventional war, which, they think, would exhaust the West and prepare the ground for the spread of their evil gospel.

In the Middle East the large quantities of war material supplied to the Arab states by the Soviet must constitute a standing temptation to Nasser or some other leader to attempt once more the liquidation of Israel. Alternatively, the build-up of hostile forces may impel Israel towards another preventive war. What happens if someone pulls the trigger and if Russia sends "volunteers" to help her proteges? Could another Lebanon landing stop the conflict without the forces of the West becoming engaged? And if they do become engaged, where will the fighting stop?

Already, as a by-product of the U-2 incident, Khrushchev has hurled threats at our allies on whose territory American bases are situated. The United States has replied with assurances to her allies that if

Khrushchev does shoot up the bases they will be fully supported. But how, to what extent, and how quickly? Can they be saved or merely avenged? We may be sure that Khrushchev, impelled by both expansionist factions, will exploit these ticklish questions as much as possible. Throughout the whole Middle East, from the Bosphorus to Teheran, we may expect a steady increase in Soviet pressures, exerted by a combination of subversion, political corruption and military threats.

Until recently India was not menaced by direct Communist pressure. Now Chinese troops stand on her north-eastern borders, while perilously close to her northern frontier Red China is busily establishing military bases and a network of communications in Tibet. India's neutral position does not appear to be as secure as it used to be. At the same time, Soviet penetration in Afghanistan is causing Pakistan increasing concern.

Further east the chronic instability of successor governments in South-East Asia, and the economic straits of the people they rule, constitute a situation eminently suitable for Communist subversion. The vast areas of jungle and the lack of communications provide ground ideal for guerrilla activity. Communist China, bursting with revolutionary energy, is unlikely to neglect this moment of Western confusion to gather more people into her system. There it is war by proxy that we have to fear rather than an overt assault. We pin our faith in another Maginot Line if we rely on the formidable military obstacle of the Col des Nuages to hold back the North Viet-Namese. This vanguard of militant China's southern thrust is more likely to seep around the obstacle than to attempt its reduction. Unlike the enemy we face in Europe, the enemy we face in Asia at this stage is not a formal, conventional force which we can shape up to in traditional fashion. Our friends in South-East Asia are not likely to be menaced by a military array. The enemy they have to fear is one who will rise up suddenly in their midst like genii out of the ground, peaceful peasants who turn suddenly into armed guerrillas, artisans who become saboteurs, officials who turn traitors. We may be sure that this method of expansion is being energetically plotted by Red China. Our problem is to shape our defences to cope with it.

In the Far East interest centres in Japan, where opposition to the Security Pact with the United States was expressed in widespread disturbances which led to the cancellation of President Eisenhower's visit. The Security Pact gives America the right to maintain military bases in Japan for a period of 10 years. Although the bases and the maintenance work associated with them provide much employment for Japanese, it is not to be expected that their existence would be popular. Indeed, foreign bases on Japanese soil run counter to the history of modern Japan. Modern Japan originated in the revolution of 1867, which aimed at the elimination of the trade treaties, concessions and extra-territorial rights which had been imposed on the Japanese by force and threats of force. Aversion to any sort of foreign base in the sacred islands is built into the Japanese national character.

Probably most Japanese, despite their natural aversion, acknowledge the necessity for the Pact. However, it is not easy for the middle bracket of opinion to express itself politically. In current Japanese politics there is a party of the right and a party of the left, with no centre group to bridge the gap between them. The faction on the extreme right stands for the restoration of the Emperor to his pre-war status of demigod, and a militarily powerful Japan. The faction on the extreme left, although it contains few acknowledged Communists, is undoubtedly under Communist leadership. Orderly democratic processes have not yet taken firm root in Japan and, with the relaxation of the stern discipline of the past, political opinion is apt to be expressed through the medium of public demonstrations.

Chinese and Russian propagandists have adroitly exploited these factors in Japanese life. The Russians have thundered against the Security Pact, with threats of military action against the bases. The Chinese have directed a sustained personal attack on the Prime Minister, Mr. Nobusuki Kishi. Both have given clandestine support and encouragement to the Communists and the left wing trade unions, and at the same time have played cleverly on Japanese national pride. They succeeded in stirring up enough strife and disorder to stop the President's visit, but were unable to prevent ratification of the Pact. Thus, although not fully successful, they have nevertheless won a signal victory and inflicted great damage on American prestige throughout east Asia. It is not to be expected that they will relax their war against the Pact and the bases said to be vital to our resistance to Communist expansion in the Pacific region. The next Japanese elections will be of very great importance to both sides.

Thus along the whole periphery of contact, from the Baltic to the Yellow Sea, we may expect an active increase in Communist pressures. The need for statesmanship, for appropriate military strength, for a renewal of faith in our cause, was never so great as it is today.

20 June 1960. —E.G.K.

Some Minor Classics of the First World War

J. T. Laird, MA

Senior Lecturer in English, Royal Military College of Australia

TWO EARLY WORKS

I

FOR the average edu-
ed general reader, the literature
the First World War consists of
andful of "war classics," all writ-
by authors with established
rary reputations. This reader
normally be familiar with the
es of such works as Hemingway's
Farewell to Arms, Sassoon's *The*
mplete Memoirs of George Sher-
n, Aldington's *Death of a Hero*,
E. Lawrence's *Seven Pillars of*
dom, Blunden's *Undertones of*
r, Graves' *Goodbye to All That*,
narque's *All Quiet on the West-*
Front, and perhaps also Ford
lox Ford's *A Man Could Stand*
and will probably have read
e, but not all, of the books them-
es. He will rarely have ven-
d much beyond the limits of
group of war books to sample
rs written by men of lesser
ary standing, and he will seldom
reference to these other war
books in recent literary criticism or
works of literary history.

And yet, while it is true that much of the most stimulating and significant writing is to be found in the war books of the "established" authors, it would be wrong to assume that the less well known works have little or nothing to offer. Some of them, indeed, still merit, in the fullest sense, the use of the term "minor war classics"; while others are significant because of the high repute in which they were once held. Still others are interesting for the light they help to shed on the general trends in the war literature of the time, and in particular for illustrating the fact that the literature of the First World War was far less uniformly bitter and disillusioned than it is sometimes thought to be. In this article an attempt will be made to blow some of the dust off a few of the less well known novels and personal accounts of the War that deserve to be better known,

whether because of absolute merits or their earlier literary reputations. We can begin with two of the early works, belonging to the period 1915-1920.

II

The first minor classic of the First World War was *The First Hundred Thousand,* by J. H. Beith ("Ian Hay"). Published in 1915, Hay's book gives a lively description of the experiences of the early volunteers in Kitchener's New Army, during their period of training in England and on active service in France. The author's prefatory remark that "the incidents described all actually occurred" confirms the effect of authenticity that the book itself conveys. The characters represent types of British soldiers, both officers and men, and although it is stated by their creator that they are "entirely fictitious" they were obviously drawn from models in Hay's own unit of the Scottish Division. The episodes are self-contained, having been originally published as separate monthly sketches.

Despite this episodic structure, Hay's book has form. The events all concern the same unit, and describe the process of turning raw recruits into trained soldiers. The ultimate initiation into battle forms the logical climax of the work. The uniform tone adopted by the author, in his role as the cheery spokesman for the group, is an additional unifying factor.

Nor is the book without its imaginative side. *The First Hundred Thousand* is no mere piece of reporting or raw autobiography in the manner of most of the early collections of war sketches. It is a product of imagination and personality. The author's imagination shows itself, not in poetic descriptive language or in invention of a plot characters, but in a genuine wit a humour, which spring fsom a chee ful and optimistic personality:

"Then there is Zacchaeus. We c him by this name because he liv up a tree. There is a row of p larded willows standing parallel our front, a hundred and fifty yar away. Up, or in, one of these li Zacchaeus. We have never se him, but we know he is there; b cause if you look over the top of t parapet he shoots you through t head. We do not even know whi of the trees he lives in. There nine of them, and every morni we comb them out, one by one, w a machine-gun. But all in va Zacchaeus merely crawls away i the standing corn behind his tre and waits till we have finished. Th he comes back and tries to shoot machine-gun officer. He has succeeded yet, but he sticks to task with gentle persistence. He evidently of a persevering rat than vindictive disposition."[1]

Death, shelling, mud and rai these aspects of war Ian Hay tre very lightly. Self-pity and an are completely absent. His clo approach to bitterness occurs in c tain ironic references to strikes trade-union leaders on the h front. Nothing is allowed to we too heavily on the feelings of ch ful devotion to duty and the li hearted acceptance of discom and danger as the soldier's ine able lot. It may be thought that constant determination to look the bright side must produce pr ganda; but that does not happen. though Hay's sequels, *Carrying* (1917) and *The Last Million* (1 come close to propaganda, the e

1. *The First Hundred Thous Ch. 18.*

book was written at a time in the war when enthusiasm and innocence among the troops were still common and real attitudes.

Why then is *The First Hundred Thousand* no longer commonly read today? The reason is that, although it avoids propaganda, its view of war still remains a limited one, which distorts reality, not by overstressing the glories or the horrors, but rather by ignoring the variety of human reactions to war and to the military way of life. In *The First Hundred Thousand* everyone preserves a uniformly "stiff upper lip." As Evelyn Waugh once pointed out, "Ian Hay's heroes are the stuff that won the war, but Ian Hay's mind was too commonplace to discern more than their soldierly qualities."[2] In a writer of fiction such a limitation, no matter how sincere his approach to his subject may be, is usually apt to prove disastrous in the long run.

III

A very different kind of book from Hay's is Sir Ian Hamilton's *Gallipoli Diary: 1915*, published in 1920. This record of the operations at the Dardanelles from the standpoint of the commander-in-chief cannot, of course, be considered solely as a literary work; it is also a valuable source-book for the military historian. Military history is not merely a study of impersonal factors such as strategy, tactics, logistics, communications, security and geography. It must also attempt an assessment of the personalities and capabilities of the human actors in the drama, especially the military leaders. In the Gallipoli campaign, the personal qualities of the senior officers on each side had an unusually important bearing on the conduct of the campaign, and no senior British officer's personality and capabilities were as important to success or failure as those of Sir Ian Hamilton, the sixty-two years old poet-general. His diary shows how his personal qualities affected the conduct of the campaign, and how his thoughts and feelings were constantly preoccupied, in their turn, with the worries and responsibilities of command.

Gallipoli Diary: 1915 is an indispensable record to the student of the Gallipoli campaign. However, it also has an appeal to the general reader who has enough knowledge of the background of historical events to see the diary in context and to appreciate the wider significance of many of the events and reflections that Hamilton records so candidly. To such a reader, Hamilton's character forms an interesting study. Hamilton reveals himself as a generous, warm-hearted, imaginative soldier, extremely loyal both to his superiors such as Kitchener and Churchill and to his subordinates such as General Braithwaite, courageous in adversity, physically fearless, and highly intelligent. He also reveals, occasionally signs of certain deficiencies as a commander: he was, in particular, too mild in pressing his case to his superiors in England for reinforcements and supplies and too courteous towards his subordinate generals, failing to lay down strict enough plans for them to adhere to, and failing to exercise a tight enough control over their actions.

In most of his diary, Hamilton writes in a condensed manner of his day-by-day activities and reflections, revealing very clearly, in the

2. *"Sahibs and Soldiers" ("Best Sellers of the Century, No. 15"), The Observer, 6 April 1958.*

process, the shrewdness of many of his appraisals of situations and his deep personal disappointment on the occasions when he was refused the additional manpower needed to overwhelm Turkish resistance. Only occasionally does he devote space to a lengthy descriptive scene; but when he does, the writing becomes extremely vivid and dramatic. The scene on the battleship *Queen Elizabeth* at 12.5 a.m. on the morning after the landing at Anzac Cove is a good example. It comes to life as the pyjama-clad general reads General Birdwood's dispirited message suggesting a withdrawal from the Anzac beachhead, puts questions to his staff, and then sends back the message that the Anzac force must "stick it out," with its famous postscript: "You have got through the difficult business, now you have only to dig, dig, dig until you are safe," When Hamilton subsequently visited the Anzac beachhead on 30 May, he was tremendously impressed by the spirit of the Australians, and his diary entry for that day contains another vivid passage, describing the scene that met his eyes:

"Men staggering under huge sides of frozen beef; men struggling up cliffs with kerosene tins full of water; men digging; men cooking; men cardplaying in small dens scooped out from the banks of yellow clay—everyone wore a Bank Holiday air; evidently the ranklings and worries of mankind—miseries and concerns of the spirit—had fled the precincts of this valley. The boss — the bill — the girl — envy — malice, hunger, hatred—had scooted away to the Antipodes. All the time, overhead, the shell and rifle bullets groaned and whined, touching just the same note of violent energy as was in evidence everywhere else. To understand that awful din, raise the eyes twenty-five degrees to the top of the cliff which closes in the tail end of the valley and you can see the Turkish hand-grenades bursting along the crest, just where an occasional bayonet flashes and figures hardly distinguishable from Mother Earth crouch in an irregular line. Or else they rise to fire and are silhouetted against the sky, and then you recognize the naked athletes from the Antipodes, and your heart goes into your mouth as a whole bunch of them dart forward suddenly, and as suddenly disappear. And the bomb shower stops dead—for the moment; all the time, from that fiery crest line which is Quinn's, there comes a slow, constant trickle of wounded —some dragging themselves painfully along; others being carried along on stretchers. Bomb wounds, all; a ceaseless silent stream of bandages and blood. Yet three out of four of 'the boys' have grit left for a gay smile or a cheery little nod to their comrades, waiting for their turn as they pass, pass, pass, down on their way to the sea."

It is passages like this in the diary that reveal both the literary artist and the man.

THREE PERSONAL ACCOUNTS OF THE NINETEEN-TWENTIES

I

Two personal accounts of the War that deserve more attention than they have received of recent years are Herbert Read's *In Retreat* and Charles Edmonds' *A Subaltern's War*. They form, together with the once highly praised *The Weary Road*, by Charles Douie, an interesting bracket of minor war classics of the nineteen-twenties period.

These three works share with the better-known *Undertones of War*

and *Goodbye to All That* an almost complete absence of bitter writing about the War. Indeed, one of the most striking contrasts within the literature of the First World War is the difference between the anger and protest present in many of the novels—particularly in many American and Continental novels—and the relative calm and stoicism found in most personal accounts. This is not to say that all personal accounts are unaffected by disillusionment about the War; but it could be said that in few of them is free rein given to direct expression of bitterness. Normally, the closest the reader comes to disillusionment is in sensing the strain and war-weariness lying beneath the objective description and conscious effort to present a balanced, realistic picture.

II

Herbert Read's *In Retreat* (1925) is one of the most striking short narratives of the War. This is an account of Read's experiences during the large-scale withdrawal of the Fifth Army during the critical days of March 1918. As an historical document, it is accurate and informative, but it is also an exceptionally fine piece of narrative prose. In his Introduction, Read explained that his concern was with the facts alone:

"One thing I wished to avoid, and that was any personal interpretation of the events—any expatiation, that is to say, whether of the imagination or of the intellect. I wanted the events to speak for themselves unaided by art."

The resulting writing is objective, but is neither artless nor unimaginative. It gives the impression of extreme simplicity, but the terseness, clarity and vigour are the unmistakable product of literary skill and labour, as are the quick tempo and constant suspense.

Read's faithful and accurate description covers not only events but the original feelings of the time. Thus he re-creates the very atmosphere of the retreat—the sense of confusion, the growing strain and tension, the weariness, the fears, the apathy, the sudden angers, and the final relief. These emotional overtones emerge naturally and strongly from Read's strict adherence to the facts. Each situation described in the book is what T. S. Eliot once called "the formula of that particular emotion."[3]

After the war had ended, Read achieved a substantial reputation as a poet and critic of art and literature. But his narrative has received little attention in recent years.

III

Charles Edmonds, like Read, concentrates his attention on a limited part of his war experiences. Most of *A Subaltern's War* (1929) deals with the events of two battles, and this approach permits him to describe events in detail, with a resulting gain in dramatic intensity. The chapter called "An Adventure on the Somme" relates Edmonds' experiences in holding a captured trench in advance of the main British line during 1916, and that called "An Adventure in the Third Battle of Ypres" gives a picture of the more fluid kind of warfare that was developing in late 1917, when much of the time was spent in shell-holes instead of in fixed trenches.

These two battle sections were first written in 1919 and 1920, while Edmonds was still able to remember the incidents clearly. "I wrote down what remained in my mind," he tells us in his Preface, "adding noth-

3. *Selected Essays (1934), p. 145.*

ing, omitting nothing, and trying to rid myself alike of modesty and shame." These sections possess historical accuracy, which was ensured by referring to the *Battalion Diary* and other Battalion documents and also to his own letters and irregularly kept journal.

As in *In Retreat* so in Edmonds' book, the main literary appeal lies in the success of its narrative writing. *A Subaltern's War* relates the adventures of its author in a graphic manner, and with skilful attention to suspense, drama and variation in tempo. The main emphasis falls on the external events, not on the self-revelation, although the narrative gains atmosphere from the author's revelation of the moods, sensations and thoughts that the events occasioned.

Normally, the language is simple, accurate and direct. Even in the relatively static descriptive passages, such as this description of a captured German dugout, there is usually little trace of figurative writing:

"This was the first German dugout we had seen, and I felt the romance of our position too strongly to sleep just then. It was a long, narrow chamber with a steep stairway leading up to the trench at each end. It was lined with rough planks and had room only for two rows of home-made bunks — wire-netting stretched over wooden frames—a shelf which could be used as a table, two or three chairs, and the narrow gangway from end to end. There was a strong, stale, fetid smell of sweat and decaying paper and old clothes, permeated by the solid flavour of the earth that lay 15 feet thick above our heads. The floor was littered with dry cakes of mud, scraps of paper, old messages and documents, English and German, rags and fragments of food. There was a general feeling of filthiness. A thousand messes had spilled and soaked into the table; gutterings and soot abounded where candles had stood on any projection of the woodwork; the beams were shining greasily from the touch of grimy hands; there was nothing in the room that was not smeared with muddy finger-marks. Men were packed close into this corridor and lying comatose in every corner. Their limbs, flung in careless attitudes, lay across each other as they crowded on the beds or huddled on the floor. By the dim candlelight I could specially see the bristles showing on my neighbour's chin, for his beard grew very strongly. He was dozing fitfully with a pained expression on his face. I felt angry with him for he seemed so careless about it all."[4]

Occasionally, however, Edmonds employs a more ornate kind of language, one studded with metaphors and similes and exploiting the resources of rhythm and rhetoric. The following extract from a description of an early-morning barrage, which is to prepare the way for an attack during the Third Battle of Ypres, conveys a far stronger imaginative effect than is usual in Edmonds' writing:

"Suddenly the sky behind us threw up a stab of flame! A roll of thunder like the last trump itself opened with some few single blows and steadied into a throbbing roar. The shells screamed overhead so thick and fast they seemed to eclipse the sky as with an invisible roof, rumbling like earthquakes behind, crashing like a thousand cymbals before us, a pillar of fire against the

4. *A Subaltern's War. Ch. 2.*

dark sky, a pillar of cloud against the dawning east—leading us on!"[5]

Like Read, Blunden and Graves, Edmonds writes honestly and realistically about war. His account of his own conduct in battle, and that of his companions, avoids the more extreme aspects of both idealism and disillusionment. The courage he describes is not the ideal kind laid down in some of the older army textbooks, or even in such a book as Douie's *The Weary Road;* it is the kind that admits the presence of fear lurking beneath the calm surface. Similarly, in describing the external incidents in war, he does not exaggerate the horrors nor does he suppress them: he lets the facts speak largely for themselves. Thus Edmonds avoids, in particular, the didacticism and preaching that prove disturbing in Douie's book *The Weary Road. A Subaltern's War* is an authentic example of a personal narrative; it is not an argument or an essay.

It is only in his Epilogue that Edmonds departs from genuine narrative writing. Bearing the title "An Essay on Militarism," this pendant of some twenty pages presents its author's opinions on the British soldier and on warfare.

Edmonds here claims that there was no "disenchantment" among British troops during the War. It was, he goes on, merely a "legend" invented by war writers and propagated by books such as *Under Fire, Disenchantment, The Enormous Room,* and *All Quiet on the Western Front.* The two other main points he makes are that the more inspiring aspects of war, such as esprit de corps, comradeship, courage and adventure, should not be ignored by war writers, and that the soldier is "a social animal" rather than "a jaded individualist." Both facts had been wrongly overlooked, he points out, by many of the popular war novelists of the time.

The Epilogue is of historical rather than literary value. Its main importance is that in it Edmonds said things about the war and about the more disillusioned kind of war literature of the day that needed to be said, if a sense of balance and proportion were to be restored in the minds of the reading public.

IV

Some war books that established reputations for themselves when they first appeared prove disappointing when read today. Such a book is Charles Douie's *The Weary Road* (1929). In the year 1930 Cyril Falls praised it in the following terms:

"If one were asked to name the book which voiced most expressively and with the greatest literary art the sentiments of the best type of junior British officer, in the War, one would find it hard to select a better than this."[6]

Unfortunately, this judgment seems to be based mainly on admiration for the "nobility" of the author's sentiments. This nobility is still apparent to the modern reader. What is not so clear is the "literary art," of which Falls writes so confidently. *The Weary Road* is based on a numer of articles contributed to *The Nineteenth Century and After* during 1928. In its book form, despite revision and new material, the work clearly shows its origin. There is a lack of overall unity and coherence, and the mixture of styles—argument, exposition and narrative—produces an un-

5. *A Subaltern's War. Ch. 4.*

6. *War Books, p. 193.*

happy effect within the covers of a single volume.

The bulk of *The Weary Road* takes the form of an "apologia," in which Douie's main role is that of defender of the British professional soldier. Although not himself a professional, Douie served in a Regular battalion, the First Dorset Regiment, and developed a tremendous respect for regimental traditions as the source of the high morale of the best British troops. He constantly defends the traditions of the British Regular Army and singles out for special praise the moral courage of the ordinary British soldier. Much of what he says is didactically sound, as when he quotes with approval the words of Sir John Fortescue:

"We are too much inclined to think of war as a matter of combats, demanding above all things physical courage. It is really a matter of fasting and thirsting; of toiling and waking; of lacking and enduring; which demands above all things moral courage."[7]

Douie also writes slightingly of the new, sensational war literature that was so popular in his day, and rightly stresses that the War produced, in addition to horror and carnage, "memories of courage and high fellowship."[8] He praises "books on the war which hold the balance, which show both sides of the soldier's life."[9]

In practice, however, Douie's own book fails to achieve this balance: the idealistic arguments swamp all the other elements for most of the time, with the result that the book as a whole could never be considered to give a genuinely realistic account of war experience.

Some of the individual chapters do contain good realistic description. The fifth chapter, "Winter on the Somme," is written almost entirely in descriptive language, which sometimes rises to considerable heights of literary skill, as this view of the trenches near La Boisselle shows:

"We progressed slowly down the remains of a trench and came to the craters, and the saps which ran between them. Here there was no trench, only sandbags, one layer thick, and about two feet above the top of the all-prevailing mud. The correct posture to adopt in such circumstances is difficult to determine; we at any rate were not correct in our judgment, as we attracted the unwelcome attentions of a sniper, whose well-aimed shots experienced no difficulty in passing through the sandbags. We crawled away and came in time to a trench behind the cemetery, known as Gowrie Street. Liquid slime washed over and above our knees: tree trunks riven into strange shapes lay over and alongside the trench. The wintry day threw a greyness over all. The shattered crosses of the cemetery lay at every angle about the torn graves, while one cross, still erect by some miracle, overlooked the craters and the ruins of La Boisselle. The trenches were alive with men, but no sign of life appeared over the surface of the ground. Even the grass was withered by fumes of high explosive. Death, indeed, was emperor here."[10]

But this, unfortunately, is not the normal style of *The Weary Road*. The predominant impression is left by the passages of argument, like the following:

"Let the rights and wrongs of our

7. *The Weary Road. Ch. 4.*
8. *The Weary Road. Ch. 2.*
9. *The Weary Road. Ch. 2.*
10. *The Weary Road. Ch. 5.*

olicy for fifty years before the war e discussed with every frankness. et the merits and prospects of the eague of Nations be discussed witn n equal candour. But let the ounger generation know that there ever was a body of men less imued with militarism than the armies f 1914, and that they fought, sufered and died in the belief that ney were defending not only the ight of their country to order its wn affairs but the hard-won emanpation of the free peoples of the orld from militarism. Whether ney were right or wrong in their idgment may be discussed to the id of time; the spirit in which they ent to war is hardly a matter of oubt."[11]

This is true enough, but dull and eless as literature.

TWO NOVELS OF THE NINETEEN-THIRTIES

I

British novels on the First World ar tend, as a group, to be less bit-r, less brutal, and less sensational their descriptions of the horrors warfare than their German and nerican counterparts. Few of em contain direct anti-war propanda of the kind found in Rearque's *All Quiet on the Western ont,* or support a defeatist attitude e the one Hemingway's hero opts in *A Farewell to Arms.* The itish war novels also tend to be ich more optimistic about the beviour of human nature under ess. Thus, although emphasizing strain that war imposes on the rves of junior officers and men, ey show that the British troops, spite their grumbling, usually enred the hardships with dogged ermination to see things through and managed to preserve their dignity as human beings. Even in such a violently bitter novel as Aldington's *Death of a Hero,* most of the bitterness and protest are aimed at the hypocrisy of the Victorian and Edwardian generations rather than at the actual horrors of war. Moreover, in this novel the hero endures the strain until he is killed in action, while the troops with whom he is associated are portrayed as essentially human and humane.

Some of the better-known British war novels that show these general characteristics are Gilbert Frankau's *Peter Jackson: Cigar Merchant* (1920), A. P. Herbert's *The Secret Battle* (1919), Ford Madox Ford's *A Man Could Stand Up* (1926), Sassoon's *Complete Memoirs of George Sherston* (1937), Frederic Manning's *Her Privates We* (1930), and C. S. Forester's *The General* (1936). The last two works will here be considered in some detail. They form an interesting contrast, illustrating in particular two common kinds of war fiction—the autobiographic or documentary novel on one hand and the more genuinely imaginative kind of novel on the other.

II

Her Privates We (1930), by "Private 19022" (Frederic Manning), is a novel that received high praise during the decade that followed its publication. Eric Partridge called it "uncontradictably the best English war novel,"[12] and Edwin Muir "probably the best war novel of these years."[13] If the criterion for excellence in war fiction were historical or documentary truth, then these judgments would be undoubtedly justified. *Her Privates We* is an

The Weary Road. Ch. 1.

12. *"The War Continues," The Window, i, 2 (1930), 77.*
13. *The Present Age (1939), p. 142.*

autobiographic novel, not far removed from the diary genre, and the events described "actually happened," as the author confirms in his Prefatory Note. Manning describes his book as "a record of experience on the Somme and Ancre fronts, with an interval behind the lines, during the latter half of 1916,"[14] in which only the characters are fictitious. The accuracy of the incidents and of the picture of war that emerges is not in question. However, a war novel should not be judged principally by the test of its historical qualities. Its literary qualities are far more important. Should they be inferior, the novel will not outlive the period that gave it birth, or the contemporary fashions and controversies that gave it brief fame. In its own day *Her Privates We* received most of its praise because it avoided the sensationalism of so much contemporary war fiction and because it gave an authentic picture of the ordinary British soldier at war. But because Manning's book is deficient in certain literary qualities, it can no longer be regarded as the major war classic it was once held to be.

Its account of war could best be termed actualistic. The various hardships and horrors are described without any exaggeration or angry outbursts, while the innumerable trivial and monotonous incidents of a soldier's life are also documented, incidents belonging to rest periods in rear billets, and to nocturnal carrying parties nearer the front line. The characterization in the novel faithfully illustrates the patience and doggedness of the ordinary British infantryman, qualities that sustained him through boredom as well as danger. The characterization also clearly shows the British infantryman's humanity "War is waged by men," remark the author in his Preface, "not by beasts or by gods." All these thing are fully and accurately portrayed.

But actualism is not enough in novel, and can never constitute, in itself, the highest form of art. *He Privates We* relies too much on thi documentation of incident, at th expense of artistic selection an shaping. Believing that the trut of things can best be seen if all th facts are given, Manning failed t realize that plotting and choice c significant detail can throw mor light than pages of unsorted fact All too often his actualism is merel direct reporting of trivialities, whic soon becomes monotonous. Mor over, with the partial exception his principal character, Privat Bourne, Manning's characters a merely rudimentary soldier type lacking both the particularity ar the universality that more individ alized characters possess. In *H Privates We*, these types are t closely tied to their war enviro ment to have independent life; on that environment ceased to exist the memory of readers, the chara ters were no longer alive. A co tributing weakness here is fau dialogue. Although much of t narrative is panoramic, there a frequent scenes of conversati which were obviously designed p marily to illuminate the events the moment or simply to show h soldiers talk. These conversatio closely based no doubt on act conversations that Manning h heard, are too often flat and lifel as reported in the novel, and

14. *Her Privates We, Prefatory Note.*

failure is primarily one of imagination on the author's part. An example may serve to illustrate:

"'Ow d' you feel?" said Sergeant-major Robinson when he presented himself at a few minutes after six, pack, rifle and bedding complete.

"Fat and idle, sergeant-major," replied Bourne, smiling.

"We can cure that. You may go to Sergeant Tozer's 'ut: dare say 'e can make room for you."

" 'Eard you was coming back, at tea-time," said little Martlow, as Bourne dumped all his stuff on the ground beside him. "We're not goin' up the line tonight. First night off we've 'ad since we've been in this muckin' 'ole. What are we goin' to do about it?"

"Where's Shem?" Bourne asked him.

"Washin' 'isself. Let's go into bloody Mezingarbe an' 'ave a bon time, the three of us. I've got vingt frong an' a ten-bob note me mother sent me."

Shem appeared in the doorway.

"Do you know where the Padre is billeted, Shem? Come and show me the way; and then I want to find Evans. You had better come along, too, Martlow, and we shall make a night of it."

"What d'you want Evans for?" asked Martlow jealously.

"I want him to buy me some of that champagne, which is 'reservée pour les officiers'; as he is the commanding-officer's servant, they'll sell it to him without fuss."

"Ask Sergeant Tozer to come," said Shem. "He has been pretty fed-up lately."

"All right, but I must find the Padre first. We shall have plenty of time to look for the sergeant later; or you may go and look for him, while I'm waiting for the Padre."[15]

Manning's narrative prose is precise and terse, but, for the most part, undistinguished. However, occasionally, it is capable of conveying a fine effect. The closing scene of the novel has power to move the reader with its subdued pathos:

" 'It was hard luck,' said Sergeant-major Tozer with a quiet fatalism.

"Sergeant Morgan left him; and the sergeant-major looked at the dead body propped against the side of the trench. He would have to have it moved; it wasn't a pleasant sight, and he bared his teeth in the pitiful repulsion with which it filled him. Bourne was sitting: his head back, his face plastered with mud, and blood drying thickly about his mouth and chin, while the glazed eyes stared up at the moon. Tozer moved away, with a quiet acceptance of the fact. It was finished. He was sorry about Bourne, he thought, more sorry than he could say. He was a queer chap, he said to himself, as he felt for the dug-out steps. There was a bit of a mystery about him; but then, when you come to think of it, there's a bit of a mystery about all of us. He pushed aside the blanket screening the entrance, and in the murky light he saw all the men lift their faces, and look at him with patient, almost animal eyes.

"Then they all bowed over their own thoughts again, listening to the shells bumping heavily outside, as Fritz began to send a lot of stuff over in retaliation for the raid. They sat there silently: each man keeping his own secret."[16]

---

15. *Her Privates We. Ch. 7.*

16. *Her Privates We, Ch. 18.*

III

C. S. Forester's *The General* (1936) is one of those all too rare things, a war novel that not only gives a completely realistic account of war and the army, but is also a first-rate piece of story-telling and characterization.

Forester here applies to a serious military subject those narrative gifts that have made him such a popular author. His story moves quickly and the style is economical and limpid. There are no superfluous passages of description or reflection. The scenes are short and follow one another swiftly, within a framework of summary writing that is sophisticated and pleasantly ironic. The dialogue is natural and terse. The pictorial element in the style, although showing through only in isolated paragraphs and often only in sentences, is clear and vivid:

"He got on his horse again and rode furiously along the slippery chalk track over the summit of the downs to where the Fusiliers languished. A spiritless guard, besodden with misery, turned out to present arms to this extraordinary spectacle of a brass hat in the icy rain, and Curzon, without waiting for the arrival of the commanding officer, began his inspection."[17]

The General is a study of a British Regular Army Officer, Lieutenant-General Sir Herbert Curzon. Curzon is a vividly credible and representative figure, probably the best fictional study we have of a British Regular Army officer of the period prior to and during the Great War. Curzon has many good points. He is always the soul of honour and is unflinchingly patriotic. He shirks no duty, and possesses unquestioned courage, energy, and determination, together with a rough, practical kind of common sense. Forester thus does not make the common mistake of certain recent American war novelists of presenting the senior officer in a consistently unfavourable light. But Forester does show that Curzon is snobbish, unimaginative, excessively rigid in his military thinking, and slow to understand the potential of new weapons, like the tank and machine-gun, and the new defensive power of barbed wire. (We wonder in passing to what extent Pierre Boulle may have been influenced by Forester's General Curzon in portraying Colonel Nicholson in the recent war novel, *The Bridge on the River Kwai*, for Nicholson bears a remarkable similarity to Curzon in certain respects.)

Curzon is so successfully revealed in this novel because Forester has employed the technique of a double "point of view," the two viewpoints being Curzon's and the author's. The frequent discrepancy between the two is what gives the character-study much of its depth; for while we learn a great deal about Curzon's honourable motives from his own reflections and perceptions, we also see, from the author's ironic manner of narrating certain incidents, that Curzon's apparent virtues are often very real disabilities.

One of Forester's main intentions, indeed, is to show that the costly British policy of "attrition"—of constant pressure and bloody offensives like Loos, the Somme and Passchendaele—was the product of unimaginative and procrustean military thinking by senior British officers like Curzon. Forester suggests that a wiser course would have been the "inglorious" alternative of doing

17. *The General. Ch. 11.*

nothing. In Leon Wolff's *In Flanders Fields,* the recently published American study of the campaign of 1917, a similar general thesis is propounded.

Forester's actual reconstructions of the battles of Mons and First Ypres, and of Loos, the Somme and Third Ypres have been deservedly praised for their historical accuracy. And because the author always remains in touch with the concrete and the particular, never forgetting that this is a fictional story about individual characters, the war sections are eminently readable as well. Both the historical and literary merits of Forester's picture of war may be seen in this description of part of the Battle of Passchendaele in 1917:

"Once more the weather broke, and the country, its drainage system battered to pieces, reverted under the unceasing rain to the condition of primeval swamp from which diligent Flemish peasants had reclaimed it in preceding centuries. Already intelligent privates in the ranks were discussing whether the Germans had a secret method of bringing rain whenever they wanted it for tactical purposes.

"Curzon in his headquarters, as the days went on and the rain roared on the roof, began almost to feel a sinking of heart. The toll of casualties was mounting, and, significantly, the number of the sick, while progress was inordinately slow. Those optimistic early plans had envisaged an advance a mile deep, and here they were creeping forward only a hundred yards at a time. Tanks had proved utterly useless in the swamp. The Germans with their usual ingenuity and foresight had studded the country with concrete fortresses to hold the line where trenches were impossible to dig, and attacks were horribly costly. There were moments when Curzon hesitated before forcing himself to read the casualty figures of the divisions he had sent into action."[18]

Forester, unlike Manning, succeeded in avoiding the pitfall of excessive reliance on documentation. His war novel reconciles the claims of imagination and actuality.

18. The General. Ch. 22.

COMPETITION FOR AUTHORS

The Board of Review has awarded first places and prizes of £5 for the best original articles published in the April, May and June issues to:—

April—"Submarine Menace in the Pacific," by Staff Sergeant P. G. Gittins.

May—"The Red Dragon of China," by Staff Sergeant P. G. Gittins.

June—"Recruiting for the CMF," by Lieutenant-Colonel C. L. Thompson.

THE FIRST AUSTRALIAN GENERAL SERVICE VEHICLE

Major J. T. Ashenhurst (RL),
Army Design Establishment

"Truck on loan excellent means of transport so far 280 miles heaviest load 20 men and 400 gls of fuel average speed on plateau 20 miles per hour . . . reduces maintenance on weazels and tractors . . ."

This extract from a radiogram from the Australian National Antarctic Research Expedition station at Mawson concerns a new four-wheel drive truck known to the AMF as Truck, cargo, 2½ ton Aust, No 1, Mk 1. There is also a Mk 2 version, which has a winch.

Later information from the Antarctic indicated that the truck had completed its first 500 miles between Mawson and the Masson ranges. It had encountered and overcome blue ice, hardened snow, and soft snow up to ten inches thick. Crevasses up to two feet wide and the steep climb between Mawson and Gwamm (an ice airstrip) had been negotiated successfully. With the message came suggestions for improving the truck for service in such conditions.

The truck, sent to the Antarctic aboard the *Thala Dan* in January of this year, is representative of one hundred such vehicles produced by the International Harvester Company of Australia for the Department of Supply in 1959. They are the outcome of years of research and design by the Army Design Establishment and IHC, working closely with the Army, the sponsors of the original project.

Until the appearance of this vehicle on the Australian scene, production in this country had been confined to commercial type vehicles. The new truck has the distinction of being the first military general service vehicle to be produced in Australia.

The design is based on the concept of a basic chassis with the highest possible Australian content, maximum use of commercial componentry, and interchangeability of parts. It is intended to extend the use of this chassis to a number of operational roles, some of which are already under investigation in the Army Design Establishment.

Prototypes of the cargo version of the truck were subjected to exhaustive design trials at the Trials and Proving Wing, Monegeeta. Here every effort was made to anticipate all possible hardships the vehicles would encounter in service. Natural hazards were used as much as possible, and when these were not readily available the required conditions were simulated.

After completing the standard de-

Truck cargo, 2½-ton, Aust, No. 1, Mk 1.

sign trials at Monegeeta, the prototypes were put through their paces by the Jungle Training Centre, Canungra, the 7th Independent Field Squadron, RAE. Casula, the 2nd Royal Australian Regiment at Holdsworthy, the Royal Australian Artillery at Cronulla Beach and other locations, and the 1st Armoured Regiment, Puckapunyal. To complete the picture, one of the prototypes was taken by an ADE team to the Snowy Mountains for trial under cold weather and snow conditions.

More than one-third of Australia is within the Tropical Zone, and the areas involved can be divided roughly into the "hot-wet" and the "hot-dry" regions. It follows that considerable importance is placed on the performance and durability of equipment in those areas which are confined mainly to Queensland, the Northern Territory and West Australia.

The new 4 x 4 truck spent a considerable probationary period in Queensland's Far North. Its first introduction to this area and the "hot-wet" conditions of the tropics was in the brigade exercise Operation GRAND SLAM, in which 44 trucks were used as first-line transport.

Later on, one of the trucks was subjected to a 21-day static trial in jungle conditions near Innisfail. Following this, as a tender vehicle towing a 200-gallon water trailer, it accompanied two Land-Rover four-stretcher ambulances on an endurance trial across Queensland to Tennant Creek in the Northern Territory, and down through the Centre

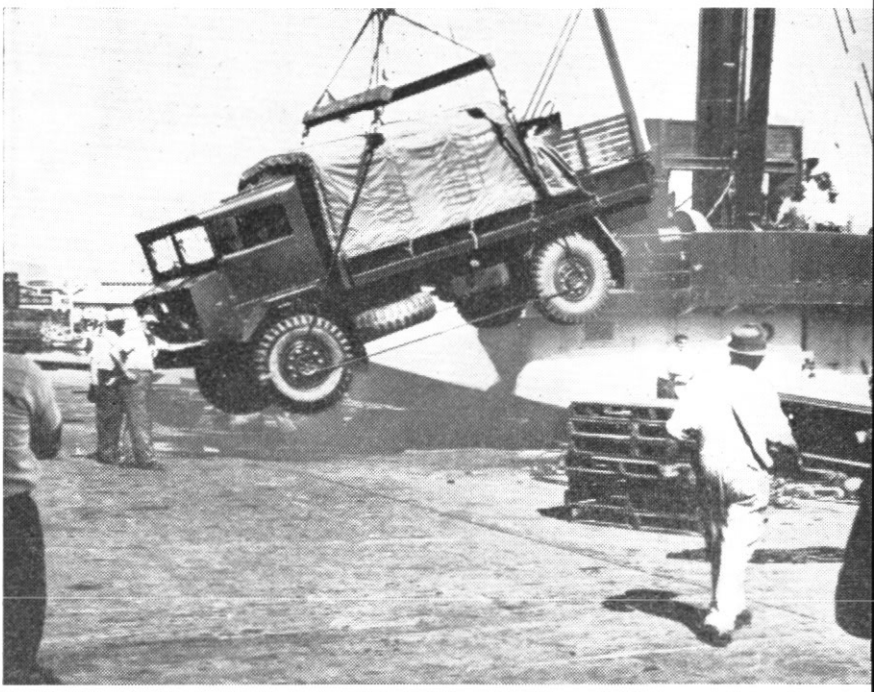

The 2½-ton truck being loaded on to the "Thala Dan" en route for the Antarctic.

via Alice Springs, Kingoonya, and Port Augusta to Melbourne, thus encountering the "hot-dry" conditions of the continent.

In West Australia twenty trucks are being used by the PMG's Department in work connected with the Woomera rocket range. Here the work they are doing is much more demanding than was ever envisaged in the original specification. It is not surprising, therefore, that some unexpected defects have occurred. These are being investigated, and the experience gained can only react to the mutual benefit of all who use trucks of subsequen manufacture.

To sum up the character of thi newcomer to the wheeled ranks o the AMF one may say that it is a versatile and willing servant, a home in the metropolis and th bush. It is rugged and dependabl and should prove a worthy succes sor to the assortment of vehicle that has gone before—and what i more, it is Australian.

A more intimate picture of th basic details of the truck is show in the plan diagram and key accom panying this article.

Salient Chassis Features

1. Identical front and rear differential and hypoid gear assemblies.
2. 12.00 x 20 tyres.
3. Interchangeable wheel bearings.
4. Dual 20-gallon petrol tanks giving range of 300 miles.
5. Transfer case with interchangeable gears, bearings, shafts and sleeves.
6. Interchangeable shafts, transmitting drive to front and rear axles.
7. Identical semi-elliptic leaf springs over front and rear axles, with auxiliary springs over the rear axle.
8. Interchangeable shock absorbers.
9. Compressor to supply air for trailer brake and Air Pak servo mechanism operation.
10. Air Pak servo mechanism to boost hydraulic brake system of truck, and operate winch controls.
11. Horizontal type power - operated winch to operate on front or rear winching. (Optional fitting.

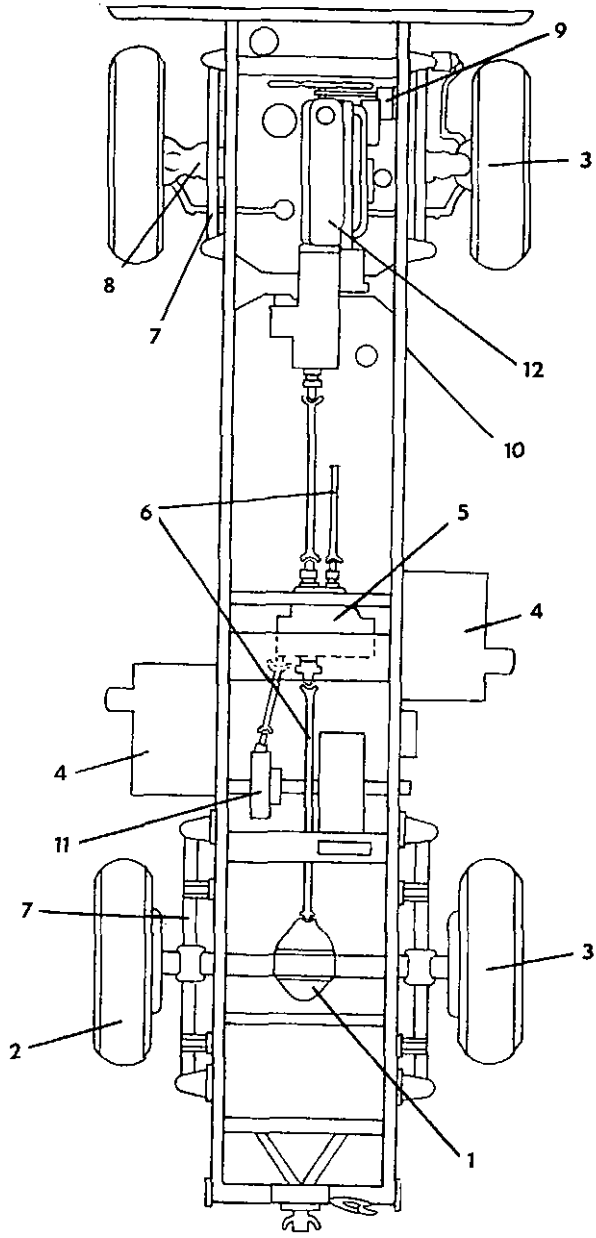

12. Petrol-driven commercial type engine, Type IHC ABD.282, developing 120 bhp (net) at 3,600 rev/min.

BE ATTRACTIVE — — TO BE ACTIVE

Captain E. M. McCormick
Royal Australian Infantry

ON 1 July 1960 the CMF again becomes a purely voluntary organization recruiting solely from persons who voluntarily offer their services for part-time military training. As the majority of National Servicemen who at the present constitute the major strength of the CMF do not wish to continue serving, a major recruiting drive will be necessary to attract the type and number of volunteers required if CMF training is going to be of any benefit to the nation. The CMF must now compete with civilian organizations for the services of the young men it requires, and to do this successfully it must offer some attraction which will make these young men want to volunteer for military training. Unless it can at least equal the attractions offered by civilian volunteer organizations any recruiting drive, no matter how well organized, will be a dismal failure. What then is being done to attract the required type of young man, and is there any way in which the CMF can be made more attractive without losing its military value.

In peacetime conditions, when an armed threat to the country appears remote, patriotism among the population becomes latent and there is a certain reluctance on the part of civilians to give up their spare time for military training. In the main, people agree that such training is necessary, but are more than prepared to leave it to the fellow next door rather than play an active part in it themselves. In the event of a threat to the country these same people rush to volunteer for the services, but, in this modern age, such a rush will probably be too late, and therefore the utmost must be done to attract civilians to take part in military training in peacetime.

During World War II it was quite common to hear people saying that one volunteer was worth two pressed men. Since then, however, a school of thought has arisen which casts doubts on the value of the voluntary system, and if we consider the attractions offered to the CMF soldier today it would appear that this school has gained ascendancy in our way of thinking. You may well ask, "What then are the attractions offered by the CMF today"? These can be summarized in one word, MONEY. Make no mistake, there is nothing wrong with money as an attraction combined with other attractions, but as the sole major offering it will not, in itself, attract the required type of volunteer and, if combined with slipshod, uninteresting training, it will do nothing to

convince the volunteer already serving that he should continue his service. This fact has been substantiated by the majority of national servicemen electing discharge rather than continuing to serve on in the reorganized CMF. Volunteer units such as Commandos, paratroops, etc, have always been most reluctant to accept men whose urge to volunteer is based solely on monetary gain, and monetary gain will today no more attract the right type of volunteer than it has done in the past. When one considers the slipshod boring training evident in many units today it is obvious that vigorous leadership is lacking, and the type of civilian leader, who has in past wars proved his worth in the armed forces, is not being attracted to the CMF. Something is wrong with the system.

What makes a man volunteer? There are a variety of causes, but it is generally one of the following:

(a) Belief in a cause.

(b) A desire for adventure.

(c) A desire to belong to an elite organization.

(d) A desire to emulate the deeds of his forebears.

Basically monetary gain, in itself, does not enter into it, but combined with one or more of these reasons *it is an added incentive.* If the CMF is to obtain the right type of man in sufficient quantity it must therefore stimulate or provide all or most of these reasons for service. This is not an easy task, but it can be done, and it is now appropriate to consider each of these reasons in turn and see how it can be stimulated or provided as the case may be.

Belief in a Cause, in a democracy in peacetime, is extremely hard to produce. It is more evident in followers of totalitarian states such as Communists and Facists and in followers of religions where the members have from an early age undergone an intense period of indoctrination, producing in them a complete belief in the cause. The citizen of a democratic state rarely reveals in practice any strong belief in the democratic way of life, and he can be said to have a negative attitude. However, if his way of life is threatened by outside or foreign intervention he will show strong feeling of indignation that any foreigner should attempt to impose an alien system on him, and in the event of a war the Government encourages this attitude until the citizen finally believes that his cause is just and he is on the side of the righteous. When the threat is relieved he quietly returns to his normal negative attitude. Belief in a cause is therefore a very difficult thing for an organization like the CMF to produce or stimulate amongst non-members, and can be considered outside the scope of that organization. However, once a man has volunteered for service he can, by education in current affairs and military history, be given a cause in which he can wholeheartedly believe, and it is in this sphere that the CMF can and must be active. Part of the training curriculum must be devoted to an explanation of why the CMF is necessary; its role in the world today; the effect of current affairs on its role and its past achievements. Such indoctrination will provide him with a cause he can believe in, strengthen his original reason or reasons for joining, and make him a keener and more enthusiastic member firm in the

belief that his cause, the CMF, is important and of value to the country.

The desire for adventure is common in most young men, and particularly in the type required by the CMF. To do something different, to get away from the more humdrum routine of daily life in this mechanical age, adds spice to life. This type of young man, the one with a sense of adventure, is of great value to the CMF, and every effort must be made to attract him to the CMF by providing the adventure he requires. Military training in peacetime is actually most conservative, and there is really little opportunity, except in such units as Commandos, for the serving young soldier to obtain the adventure he desires. This lack can be made up by participation in sports, not spectator sports such as football, where thousands receive an artificial thrill from the antics of a few men on a small field, but what we can describe as participator sports, sports which demand that the individual use his guts and initiative and make his own decisions. Some such sports are gliding, underwater swimming, small boat sailing, cliff and rock climbing, mountaineering, ski-ing, parachuting and canoeing. All these sports do in some degree produce a skill which may be required in a particular military situation, but that is not their greatest value to the army. Their main value lies in the fact that the participant in these sports is required to control his fears, use his initiative and his powers of leadership and make his own decisions. In addition, they provide the scope for adventure required by healthy young men. The rifle company has been reorganized based on the premise that, at least in war, the chief stock-in-trade of the platoon commander is leadership and initiative, and that he will often not have any great tactical skill or experience. (AAJ No. 129, para 16.) What is of more value to the army than a sport which exercises and sharpens those desired qualities of initiative and leadership?

It may well be said at this stage that such sports clubs already exist in civilian life, so why should the army bother with them? The answer to this is, apart from the obvious advantages already enumerated, that more of these sports require equipment and training the cost of which is beyond the average youth, and this prevents them from participation. If the army sponsors such clubs and subsidizes them by supplying equipment, enabling active members of the army to take part in them at a nominal cost, it will have a major attraction for adventurous youth, thus obtaining a supply of high-grade recruits. In addition, by allowing these sponsored clubs to compete in civilian competitions it will advertise and stimulate interest in the army and its doings. When it is considered that at the present time, for training alone, it costs £45,000 a year for a CMF battalion to reach a highly questionable standard of elementary training, the diversion of part of the money to such a project as described would give the country much greater value for its money.

An organization can be considered elite when, through its own efforts, it reaches such esteem in the eyes of the public that it can pick and choose its members and demand

they reach certain required standards before being considered for enlistment. To reach such a position certain factors must be present in an organization. Some of the more important of these are vigorous, resourceful leadership, efficient organization, efficient public dissemination of its aims and the benefits of its training, confidence of the member in himself and his organization. To these may be added the glamour of a particular job and a smart uniform, but these in themselves are not significant.

The CMF can become an elite organisation in the eyes of the public, but in the process it must do some house cleaning. It must ensure that it provides the vigorous resourceful leadership required. As in civilian business, promotion must be governed by a man's practical ability to do the job. The time-server lacking in leadership, originality and initiative must not be allowed to reach a position of authority purely on the basis of his service. No organization whose main stock-in-trade is leadership and initiative, and which draws its recruits from the whole of the people can afford to accentuate academic qualifications over practical ability. Examinations are necessary, but should be of as practical a nature as possible, thus ensuring that the better-educated man, through his ability to express himself on paper, although practically inept, cannot gain ascendancy over the capable, practical type required as junior battle leaders.

With vigorous, resourceful leadership will come efficient organization, with every member carrying out his allotted task with enthusiasm and to the best of his ability. In turn, the public must be made aware of this efficiency. The organization must get its aims across to the public and it must demonstrate to them the results of its training. This can be done through the normal media of the press, and more particularly by the new impact of television. Short films of the type already produced to stimulate recruiting must be shown on the national TV circuits. Open days for the public, at which they can go and see the organisation working, be entertained and to a certain extent participate in its activities, must be a regular feature on a unit's programme. Similar invitations must be made to executives of civilian firms if their support is to be enlisted as it must be.

In addition, frequent small social events designed to enlist the support of the female companions of the members must be held. Women have a most insidious propaganda service of their own, and with it they can do much to make or break a voluntary organization.

In addition to those measures, it must be remembered that with a joining age of 17½ years many young men in the teenage bracket will join the CMF. It would appear that one of the peculiar results of industrialization is a lack of confidence and a feeling of insecurity produced in many members of this age group, and action must be taken to combat it. To succeed in this the army could do no better than provide schools for young soldiers and senior cadets on the same basis as The Outward Bound Movement. Schools designed to bring out the qualities inherent in each youth and develop his confidence in himself and his physical capabilities. Such

schools would offer young men a cheap and interesting holiday, and the results would benefit both the army and the civilian employers of these men, thus again enlisting the support of the civilians for the organisation. The CMF can be something the young men want to be part of, that the public is proud of.

A desire to emulate, if not surpass, the deeds of his forefathers is latent in every young man of spirit, and this desire can be cultivated and stimulated to the advantage of the CMF. It always seems strange that in any week on Australian television the viewer can see and follow entertaining short films on deeds of daring performed by the armed forces of the United States, yet he will search in vain for even one mediocre half-hour on the deeds of his own Australian servicemen. This is a field which should not be neglected. Our new recruiting films have shown that Australia can produce first-class short films containing both fact and entertainment, so there is no reason why we cannot produce shows which will increase the public interest in its own armed forces, keep the necessity for such forces always before them and, in the young man, stimulate the desire to follow in his father's footsteps. Neither should the fields of radio and press be forgotten. A magazine such as the British Army's "Soldier," available to the public at low cost and containing facts of interest and entertainment, well illustrated and presented, would be a great help in increasing the public awareness of the aims, benefits and doings of the army as a whole. No matter the medium used, the finished product must be of the highest standard of entertainment. Its message must be unobtrusive. In an indirect manner what better way of promoting the public interest?

The CMF will in the near future be dependent purely on volunteer enlistment to carry out its task. Such volunteers must be of the highest calibre and the type of man required will not be attracted by mere monetary gain alone. To do its task the CMF must attract and hold volunteers. To do this it must by education give him a cause to believe in, offer adventure and, by its own efficiency and leadership make the pubiic and the member proud to be associated with it. When these things are done it will attract the type of man needed. Until something is done to establish the required attraction, any recruiting drive will be a mere waste of time, effort and money. The task is great but not impossible. It can and must be done if the country is to obtain full value for the funds expended on its defence, if, indeed, it is going to have any defence at all.

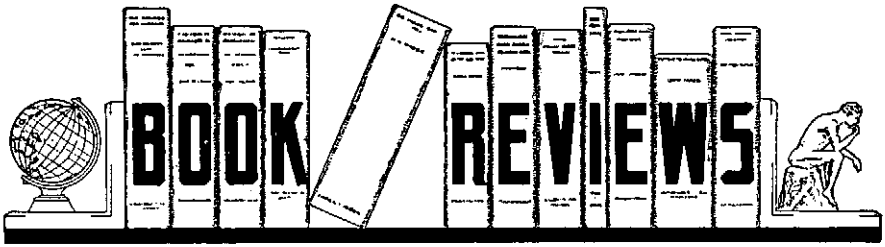

CYPRUS GUERRILLA, by Doros Alastos. (William Heinemann Ltd, 317 Collins Street, Melbourne.)

Of recent years guerrilla warfare has been given increasing attention by soldiers of the Free World, chiefly because it is a form of warfare at which the Communists are adept and which they are likely to employ wherever they get the chance. Indeed, guerrilla warfare was the main instrument used by the Chinese Communists in hacking their way to power, by the Indo-China Communists in expelling the French, and by the Malayan Communists in their long and fruitless campaign to win supremacy in Malaya.

The spectrum of guerrilla warfare runs from the condition where the local population is hostile to the guerrillas, through mere indifference to active, wholehearted support. The guerrilla rebellion in Cyprus was at the latter end of the spectrum, the end most difficult to cope with.

Doros Alastos is well qualified to tell the story of this long and bitter struggle. He is a recognized authority on the eastern Mediterranean. Although born in Cyprus and deeply attached to his native land, he writes with rare objectivity. Writing with understanding and sympathy for the cause of his own people, he casts no abuse upon the British. On the contrary, he sees their point of view with equal clarity, and gives them full credit for their discipline and restraint under the most provocative circumstances.

In Cyprus the Church has always occupied a position of great political influence; indeed, it has been an integral part of the machinery of government and public administration. Consequently when Archbishop Makarios, senior prelate of the Orthodox Church in Cyprus, espoused the cause of Cypriot liberty he had at his command a ready-made organization which reached into practically every aspect of life in the Greek-occupied portion of the island. Through that organization he was able to develop widespread passive resistance to the British. When Colonel Grivas, a retired officer of the Greek Army, known in Cyprus as Dighenis, arrived to organize active opposition by means of guerrilla bands, Makarios was ready and able to provide him with most effective support.

The twin aims of the insurgents were the expulsion of the British and union with Greece. An internal complication arose from the fact that the Turkish Cypriots, while holding no brief for the British, had no desire to be brought under Greek rule. The British forces, therefore, had not only to cope with passive resistance and fierce guerrilla activity, but had also to keep the two

sections of the population from tearing each other apart. Externally the situation was fraught with danger to the Western Defence Organization, because it was politically impossible for the Greek and Turkish Governments, both members of NATO, to disavow their compatriots in Cyprus.

In this age of nationalism and violent anti-colonialism the dice were heavily loaded against the British from the beginning. It was in the nature of the case that if they could not win quickly they could not win at all. Yet, having failed to win quickly, they stubbornly adhered to a posture which clearly could not be maintained in the face of world opinion, and which tended to weaken the southern flank of the NATO alliance. On the other hand, they felt, rightly, that they could not withdraw without adequate guarantees for the security and well-being of their Turkish subjects. In addition, there was the requirement for a British base in the Eastern Mediterranean, and with the loss of Suez Cyprus became even more important.

Unable to suppress the guerrillas, hampered by widespread sabotage, frustrated by passive resistance, and harassed by world public opinion, the British Government at last changed its posture from "Cyprus as a base" to "A base in Cyprus." Simultaneously they put forward a possible solution to Greek-Turkish differences by proposing a scheme for self-government for the island rather than transfer to Greek sovereignty. With both sides fought almost to a standstill, negotiations were pushed forward rapidly to an agreement acceptable to all parties.

Doros Alastos presents fairly all the aspects of the grim and bloody struggle in his very readable book. He is equally adept and sympathetic in describing the motives of the statesmen as he is in depicting the human factors in the struggle and in showing us the personalities of the fighting men on both sides. While winning our sympathy for the devotion and resourcefulness of the guerrillas, he leaves us with a sense of deep admiration for the courage of the British soldier in action and his discipline and restraint in trying to cope with the civil population.

CYPRUS GUERRILLA is a book worthy of close study by soldiers of the Western world. —E.G.K.

CARTWHEEL: The Reduction of Rabaul. By John Miller, Jr. Office of Chief of Military History. 418 pages; illustrated; maps; index; $5.25. Reviewed in March 1960 issue of ARMY by Colonel James B. Bonham, who during the events covered by this work served in the G3 Section of Sixth Army and Alamo Force.

The literary challenge confronting today's official military historian is a formidable one. In this official report on the part played by the United States Army in the battles leading to the elimination of Rabaul as an offensive threat, Doctor Miller has met that challenge most effectively. This well-illustrated volume presents in a smoothly-flowing narrative the essential historical elements of the critical period during which the Allied army, navy and air forces in the South-West Pacific and South Pacific areas gained the upper hand over a tenacious and ever-dangerous Japanese foe. The

book is interesting to amateur and professional alike, and for those of us who had some small part in the operations involved it will fill in long-existent gaps in our knowledge.

There was nothing humorous about the problems faced by our commanders during this period of 1943 and early 1944. Only limited means could be provided General MacArthur and Admiral Halsey under the overall global strategy being pursued. The techniques of joint operations required further development and dissemination command-wide; teamwork developed with experience. Tactics, training, medical care, organization, equipment, logistics and procedures needed adjustment to fit the foe and the peculiarities of the area. Success in such a situation stemmed from foresight, courage, patience, adaptability, opponent's errors, occasional assistance from Lady Luck, and the intelligent drive of commanders and key staff assistants who expanded to meet their new responsibilities.

Under the overall direction of General MacArthur and Admiral Halsey, such superb commanders as Krueger, Kenney, Kinkaid, Griswold, Harmon, Turner, Vandegrift and Geiger drove and guided their forces northward in co-ordinated efforts. Army leaders were ably aided by competent staff and command subordinates, among them Twining, Collins, Swift, Hodge, Decker and Eddleman. Thus, as the SWPA forces gained momentum in their victories at Buna, Woodlark, Kiriwina, Nassau Bay, Lae, Salamaua, Nadzab, the Markham and Ramu Valleys, Finschhafen, Arawe, Cape Gloucester, Saidor and the Admiralties, the SOPAC forces were fighting their way from Guadalcanal to New Georgia, the Treasury Islands, Empress Augusta Bay, the Green Islands, and Emirau. At the conclusion of these widespread operations, the Japanese heart—Rabaul—lay sullen and frustrated, unable to hinder the forward progress of the Allies.

Perhaps under peaceful circumstances the American would have viewed the region in a more friendly light. Certainly at times the area provided a surface beauty that seemed untouchable: blue sky, emerald green jungle, white sandy beaches, a tropical moon in the star-sprayed sky. But the veteran is more likely to recall the strength-sapping heat and humidity, the tropical rainfall that at times approached being a waterfall, the mosquitoes and other pests, the difficulty of movement through the dense jungle in both swampy and mountainous terrain, the lack of roads and ports, and large-lettered names on the map that turned out to be tiny, unimpressive outposts of civilization. The soldier will remember wading ashore to begin each amphibious operation, the depth and abundance of the mud during rainy seasons, the variety and frequency of tropical diseases, the misshapen natives, the monotony of the diet, the importance of mail from home, the difficulty in seeing the enemy in the jungle, and the aloneness of combat with such limited visibility, missing all meals while waiting in vain from before dawn until after nightfall at an airstrip for air transportation, and the finality of KIA after the name of a good soldier and friend.

Although this phase of the Pacific operations did not include large

armoured battles, mobile land warfare, true close air support, city fighting, toxic chemical warfare, or combat between carrier task forces, it did provide a variety of combat experiences. The enemy, the terrain and climate, and the general concept of operations assured variety. General MacArthur's plan of manoeuvre envisaged a co-ordinated leapfrog advance along two axes. Objectives were selected to permit displacing forward supporting airpower onto improved or newly constructed aerodromes and to avoid costly engagements with strong enemy ground forces. Air superiority was gained over each attack objective, hostile air bases were neutralized, and enemy naval forces and shipping within range were destroyed. Every effort was made to isolate the objective under attack.

Finally, by amphibious invasion, both ship-to-shore and shore-to-shore, and on occasion by airborne assault, the land battle was initiated. Skilful execution of this well-conceived scheme of manoeuvre resulted in success with minimum casualties and maximum use of the limited resources in men and materiel. In the hands of brave and resourceful soldiers the shoelace became a garotte.

THE PROFESSIONAL SOLDIER, by Morris Janowitz. (The Free Press of Illinois, USA.)

Working under a grant from the National Security Policy Research Committee of the Social Science Research Council, Professor Morris Janowitz, of the University of Michigan, USA, made an exhaustive examination of the military profession and its place in a modern democratic society. The results of his researches are embodied in this handsome volume.

Professor Janowitz did not confine his researches to the Army, as the title of the book may suggest, but gave equal attention to the Navy and the Air Force. He is concerned chiefly with the officer corps of the three services, with the social and professional pressures that bear upon them, with their role in the formulation of national policies, with the responses they are making to the revolutionary changes of our times.

It is interesting to note that the military profession in the USA, Professor Janowitz finds, like all other professions except medicine, has failed to match the rate of material gain of the entire full-time work force. In comparison with their business counterparts, American professional officers find themselves "progressively disadvantaged." If it is any comfort to our American brothers-in-arms, we can assure them that they are not the only victims of this social aberration.

Professor Janowitz traces the evolution of the military profession from the days when the self-image of the heroic leader fulfilled nearly all the requirements of leadership, to the relatively complicated organizations of today, which tend more and more to set a premium on managerial skill. Nevertheless he insists that the old ideals of honour and service must remain the chief spiritual motivation of the profession in the future.

The Professor shows how the American military profession has moved from a posture of detachment, even isolation, from politics and community life generally, to the

recognition of the fact that it must seek to exert some influence on the formulation of foreign policies. While fully acknowledging the necessity for civilian supremacy in the political field, the Professor feels it should have a say in the formulation of policy lest a line be followed which could easily land the nation into a militarily impossible position.

At the same time technological developments and the ever-increasing reliance on industrial production has brought the profession into much closer contact with the business world. These two developments — the dangerous tensions created by the cold war and contacts with the business world—have brought about an awareness of the importance of a principle of war frequently neglected by the soldier —the Principle of Public Opinion. Consequently each branch of the profession has developed an elaborate information service designed to indoctrinate the service itself with the aims and policies of its leaders and, at the same time, to create a public opinion favourable to service aspirations. This section of the book will be of particular interest to Australian soldiers, whose neglect of the Principle of Public Opinion is not doing them any good.

Professor Janowitz deals at length with the great schism which divides the military profession of the Western world. On the one hand are the absolutists who pin their faith in massive deterrence, in the aim of absolute victory. On the other are the pragmatists who see no merit in a suicide pact, and who believe not only that the aim of any conflict should be a worth-while and attainable political goal, but that the military means employed should be appropriate to the end to be achieved.

As evidence of Communist technological and industrial advances accumulates, public opinion will tend to move towards support of the graduated deterrent concept, and will express itself through political pressure on the military establishment. Professor Janowitz suggests that in responding to these pressures the military establishment will have to modify its predilection for absolute victory and develop an organization and an operational doctrine which will enable it to readily accept a challenge at any point in the spectrum of military action. The Professor sees the military profession of the future being based on the idea of a national "constabulary force" organized, trained and equipped to deal with any operational challenge likely to arise. Because readiness for instant action is the essence of the contract, the constabulary force must consist primarily of regular formations backed by citizen forces organized on a stand-by basis.

Professor Janowitz considers that the professional soldier must take more interest in political affairs and exert more influence in the management of international relations. If he is to do this effectively the higher ranks of the profession must be given appropriate training. With few exceptions, training of this nature is one of the most conspicuous defects of the military forces of the Western world.

If they are to provide themselves with effective defence forces, the Western democracies, through their political institutions, must recognize

the worth of the professional soldier and his role in the maintenance of their social ideals. Whilst insisting on civilian political control, they must encourage the soldier to develop the esprit-de-corps, the sense of honour and duty, which constitute the spiritual foundation of the military profession.

THE PROFESSIONAL SOLDIER is the most complete analysis of the military profession that has come to the notice of this reviewer. While it deals primarily with the American scene, much of it is of universal application. It is a very valuable book, which should be studied by all soldiers concerned about their profession, particularly by senior officers. —E.G.K.

ARTICLES PUBLISHED OVERSEAS

The undermentioned articles, published originally in the Australian Army Journal, were reprinted in service journals overseas during the year 1960.

Article	Author	Journal in Which Reprinted
A Philosophy of Leadership	Col M. Austin	Military Digest, India
Brainwashing	Capt G. R. Finlay	An Cosantoir, Eire
Fit to Fight	Maj D. J. Curtis	Territorial Magazine, UK
From the Enemy's Point of View	Maj J. C. F. Maloney	Territorial Magazine, UK
How to Soldier from Nine to Five	Capt B. M. Chamberlain	An Cosantoir, Eire
Israel from the Military Point of View	Shimeon Kotler	An Cosantoir, Eire
Tactics As She Is Spoke	Col J. J. Ballard	An Cosantoir, Eire
Talavera	Col M. P. O'Hare	Military Digest, India
The Nature of the Challenge	Ed AAJ	Military Review, USA
Thoughts on the Build-up of the German Army	Gen Geyr von Schweppenburg	Territorial Magazine, UK
Some Thoughts on Ambushes in Tropical Warfare	Col M. Austin	Military Digest, India
Some Thoughts on the Local Counter-attack	Maj H. P. Boland	Military Digest, India
Some Thoughts on the Local Counter-attack	Maj H. P. Boland	Territorial Magazine, UK
Unification by Evolution	Lt-Col A. Green	Military Review, USA